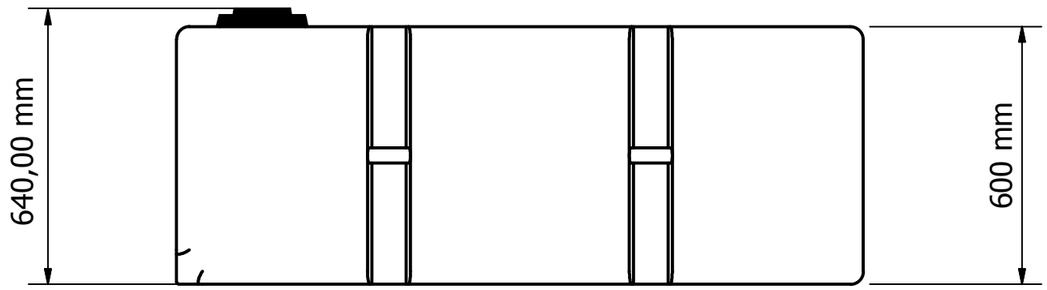

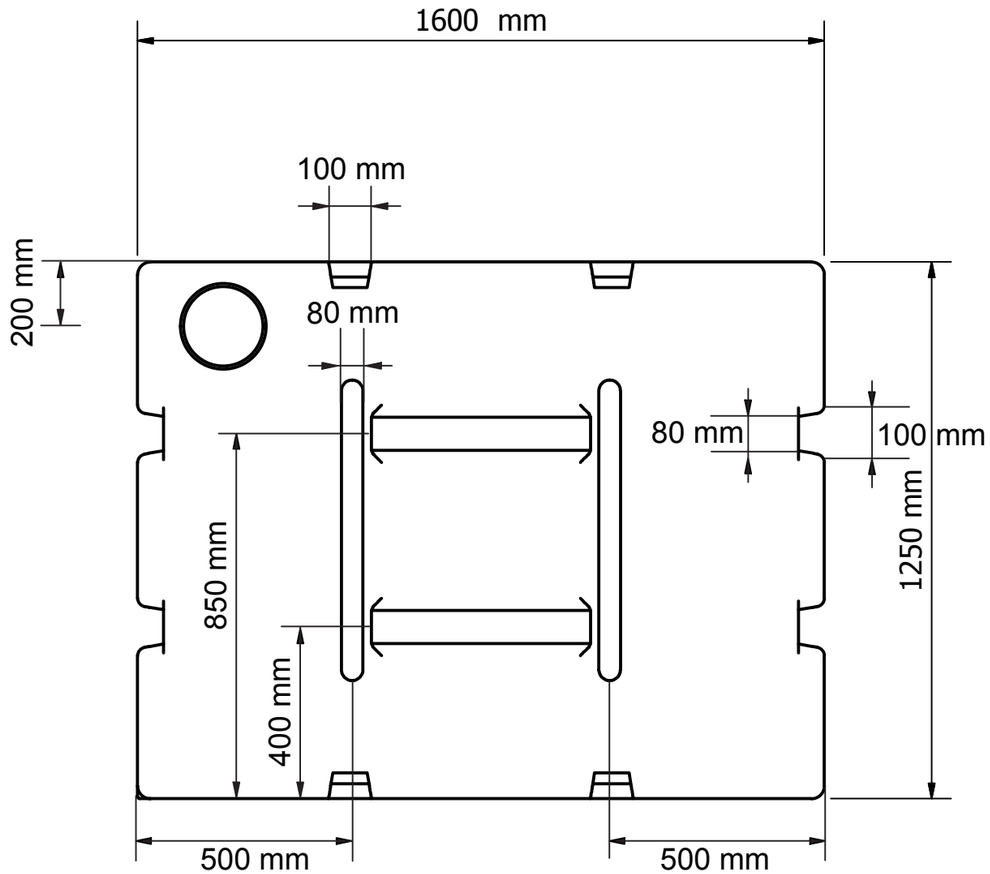

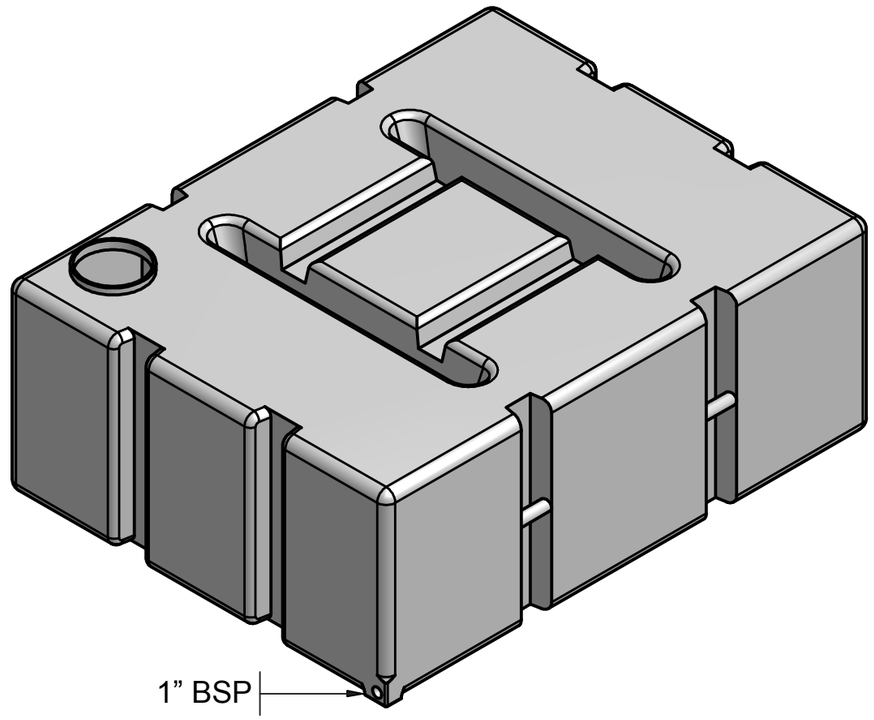

Stock Code	Volume (L)	Lid ”	Outlet ”
1000F-8	1000	8	1

TANKSDIREKT

THIS DRAWING AND THE INFORMATION THEREON IS THE SOLE PROPERTY OF TANKS DIREKT AND SHALL NOT BE COPIED OR REPRODUCED WITHOUT THE CONSENT OF TANKS DIREKT.

DIMENSIONS ARE ALL IN MM UNLESS OTHERWISE STATED.
ALL TOLERENCES +/- 3% UNLESS STATED.

REV	ZONE	DESCRIPTION	DATE

CUSTOMER:	Tanks Direkt		
PROJECT:	1000 Liter Tank flat		
DRAWN DATE:	30/05/2018		CHECKED BY:
SHEET 1 OF 1	REV A	DRAWING NO:	